SAVECair panel mounting

A

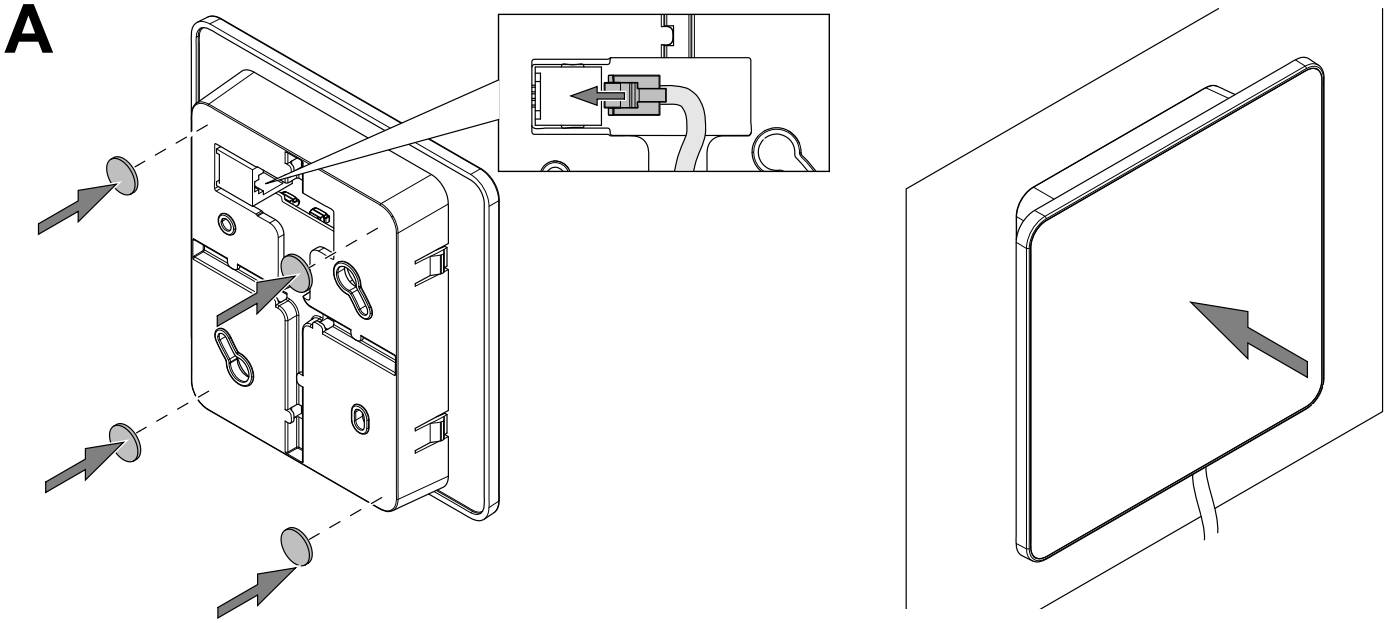

B

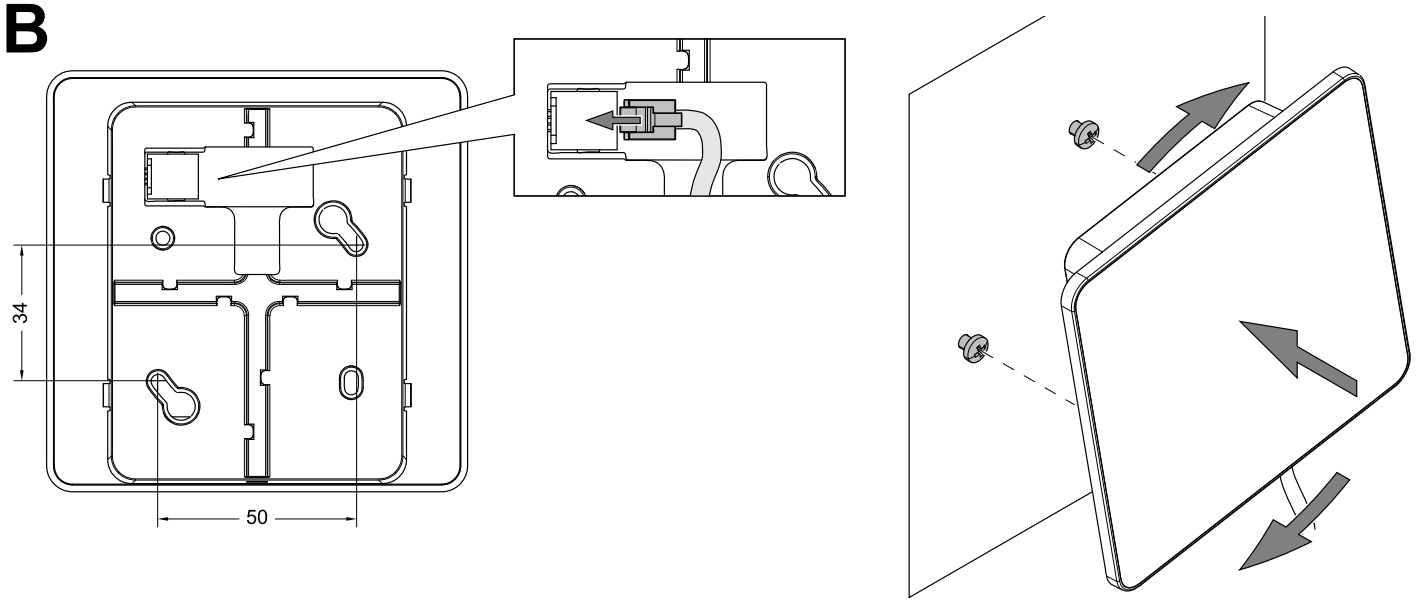

C

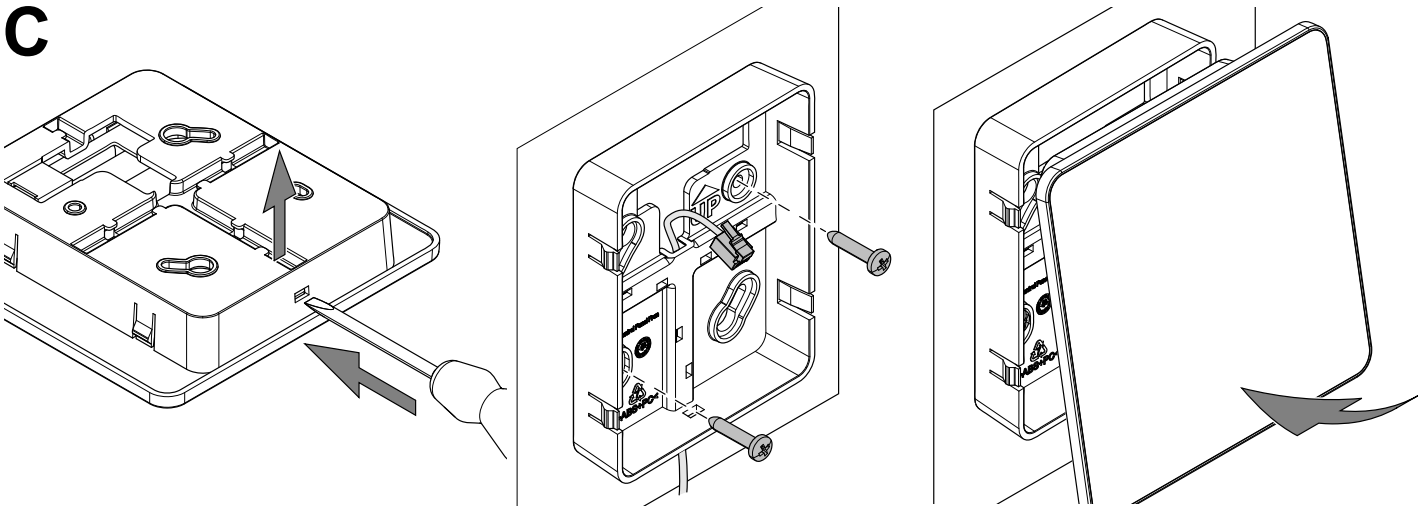

Systemair UAB Linų st. 101, LT–20174 Ukmergė, LITHUANIA
Phone: +370 340 60165 Fax: +370 340 60166